General information

Download technical specification	Technical Specification

The AG-1629 is a quad-core, highly effective ARM-based compact-size multipurpose industrial computer with IoT gateway functionality. It is designed for edge computing. It supports of Linux Debian. The computer has a built-in independent whatchdog and a USB interface for debugging.

Model Selection

Atreyo manufactures several versions of the AG-1629 with respect to components and modules used in it.

AG-1629	Memory		Hardware Options						More information
	eMMC	RAM	Cellular Network			GNSS	WiFi	BT	
	GB	GB	GPRS	3G	4G LTE				
AG-1629	8	512							Without cellular
AG-1629-LT-EU	8	512	√		√	√			For India and EU
AG-1629-LT-EU-WL3	8	512	√		√	√	√		For India and EU
AG-1629-LT-GL	8	512	√	√	√	√			Global model
AG-1629-LT-GL-WL3	8	512	√	√	√	√	√		Global model
AG-1629-LT-EU-BT1	8	512	√		√	√		√	For India and EU
AG-1629-LT-GL-BT1	8	512	√	√	√	√		√	Global model

Hardware

The gateway housing is made of anodized aluminum. There are heat sink fins on top. The gate heats up during operation and this is normal.

Side dimensions

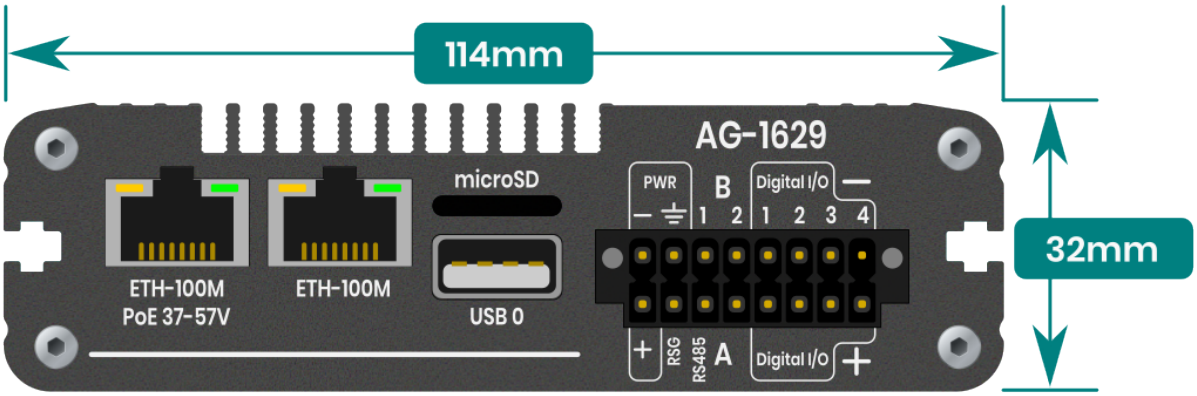

Top dimensions

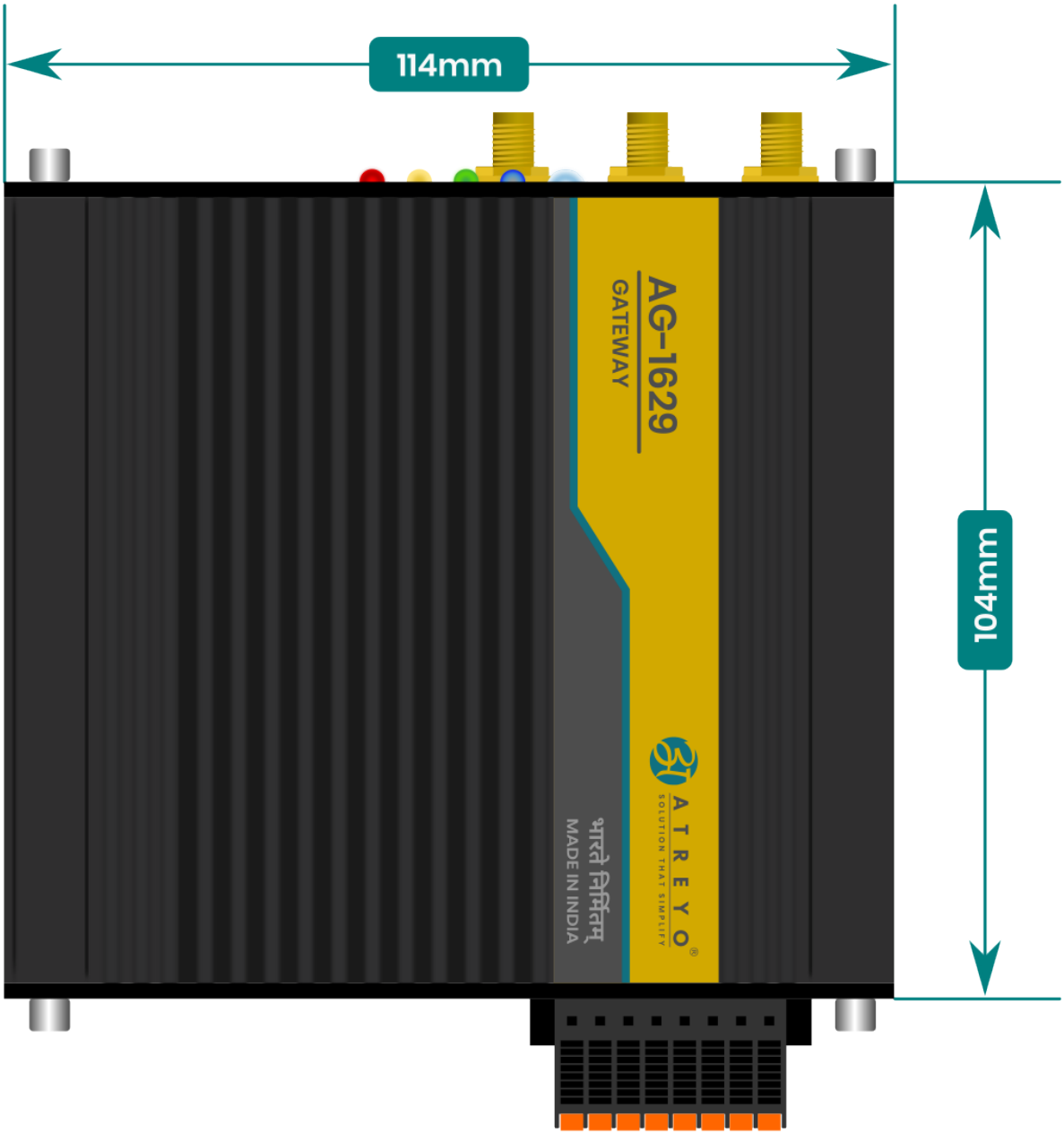

Panel view

Below is a view of the top and bottom panels with the interfaces described.

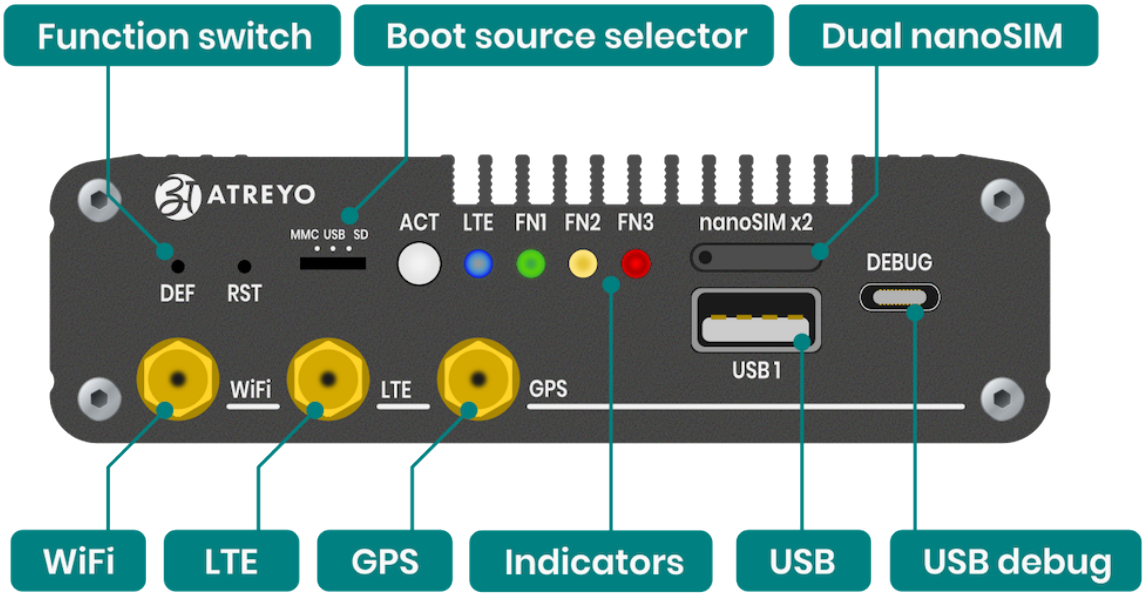

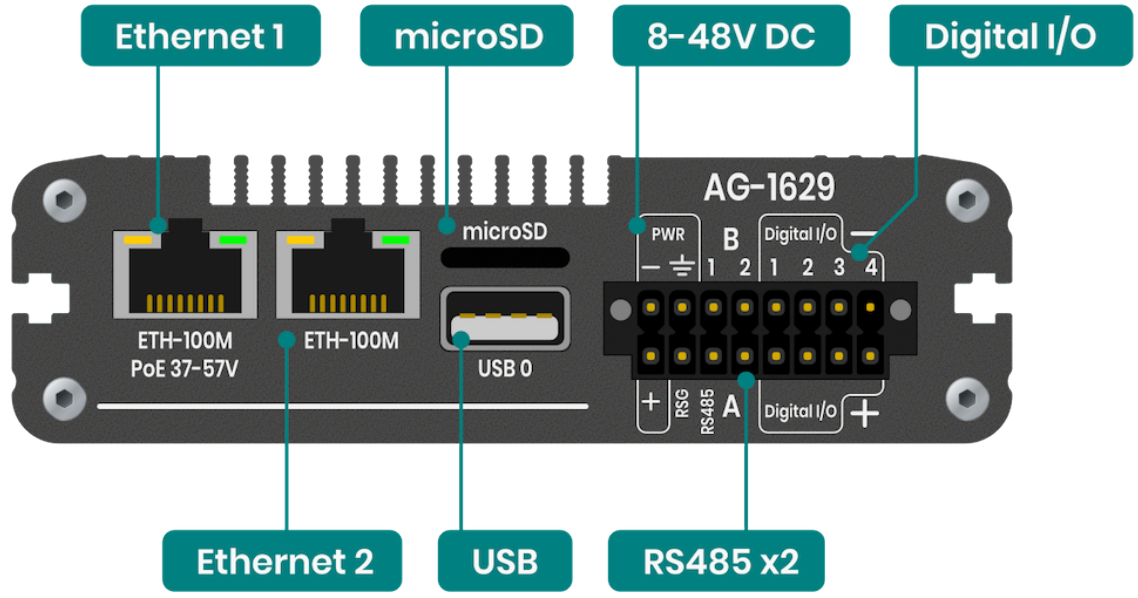

Block diagram

For a better understanding of how the computer works, we present a block diagram.

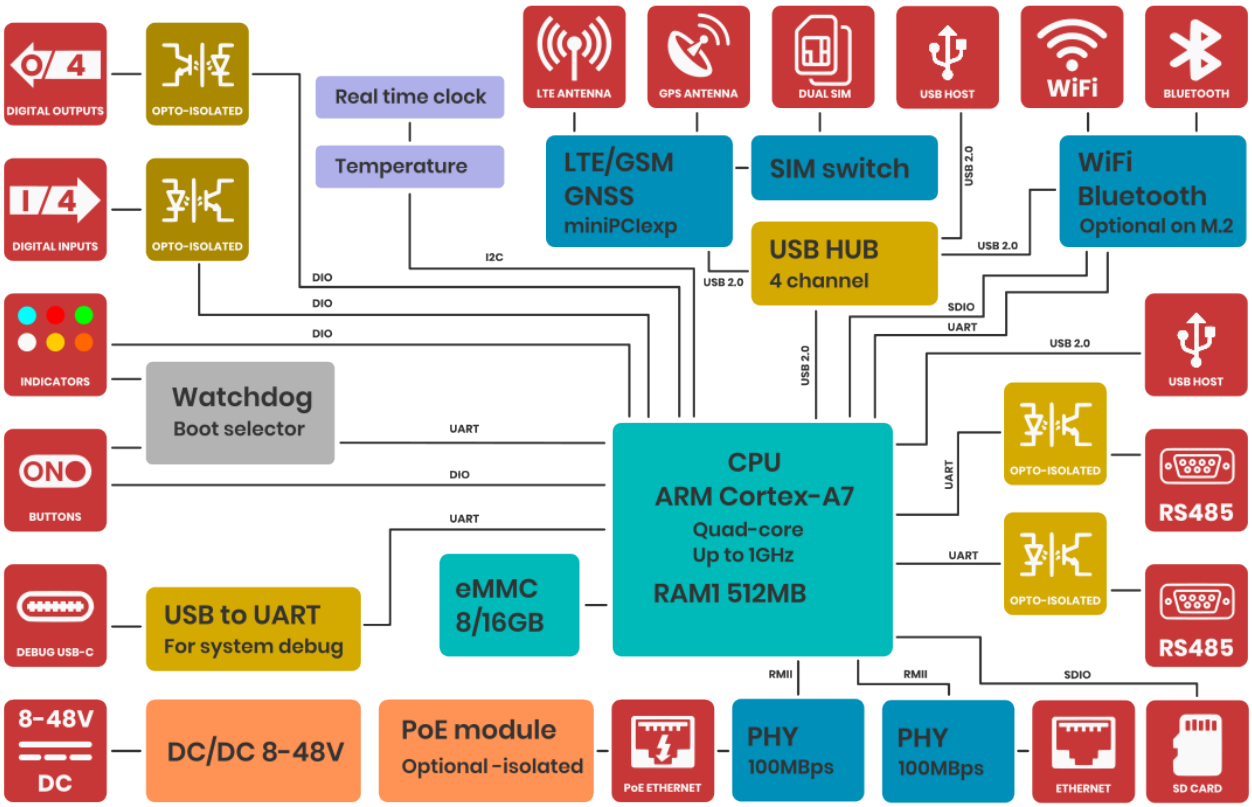

Revision #23
Created 2025-03-09 11:46:38 UTC by Yogesh
Updated 2026-11-19 07:29:59 UTC by Yogesh